Syntron Material Handling

Service Instructions

Syntron®
Light - Capacity
Electromagnetic
Vibrating Feeders
Model: F-152-A
F-212-B

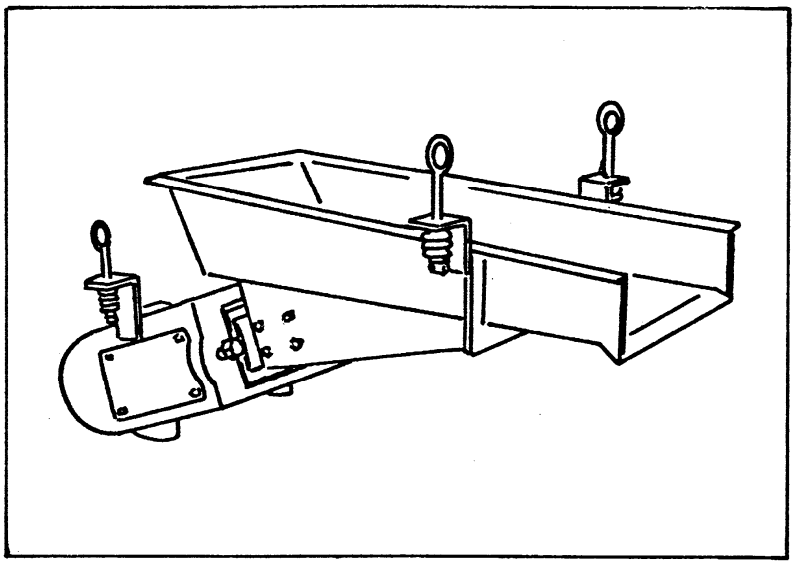

www.syntronmh.com

Service Instructions

Syntron® Light - Capacity Electromagnetic Vibrating Feeders
Model: **F-152-A & F-212-B**

Contents Page

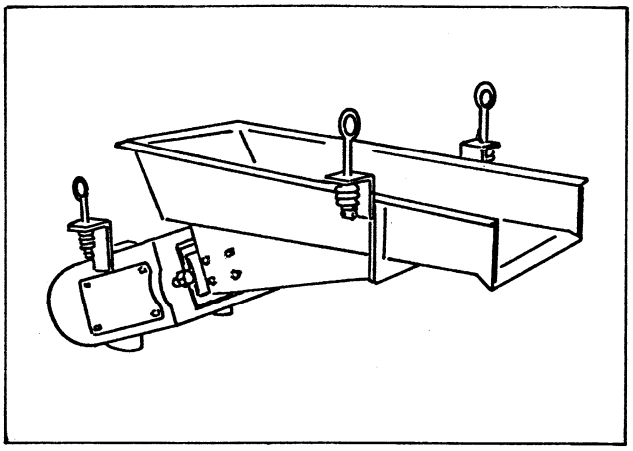

Syntron Material Handling, LLC. reserves the right to make changes at any time, without notice and without any liability or other obligation on its part, in material, equipment, specifications and model. Syntron Material Handling also reserves the right to discontinue the manufacture and sale of models, and the parts and components thereof.

NOTE: The instructions and data herein are vital to the proper installation and operation of this equipment. In order to avoid delays due to faulty installation or operation, please see that these instructions are read by the persons who will install, operate and maintain this equipment!

This manual applies to general instructions for Models F-152 and F-212. Instructions for spring replacement and magnet replacement, a parts list and operating specifications for specific models are furnished in separate instructions.

NOTE: Supporting information, such as drawings, may be attached to this manual. The information contained therein take precedence over corresponding information printed in this manual.

INTRODUCTION

Syntron® Light-capacity Vibrating Feeders are electromagnetic powered units.

The assembly is a dynamically balanced, two-mass vibrating system consisting of a trough assembly coupled to an electromagnetic drive by means of leaf springs. See Figure 1.

The drive assembly contains a magnet connected to the rear of the drive unit housing. An armature assembly, also part of the drive unit, is located opposite the magnet and is connected directly to the trough connecting bracket.

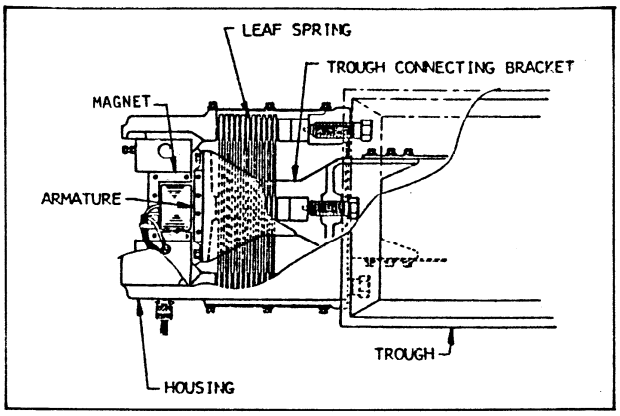

FIGURE 1 - A TYPICAL LIGHT-CAPACITY VIBRATING FEEDER ASSEMBLY

A spring assembly is located inside the housing. This spring stack is clamped at both ends to the housing and in the center to the trough connecting bracket. The trough, trough connecting bracket and armature become an assembly, joined to the drive unit only at the mid-point of the stacked leaf spring assembly.

⚠ CAUTION: Do not make any alterations to the feeder without first contacting Syntron Material Handling' Customer Service Department. Alterations or additions to the feeder could reduce the capacity of the feeder, or may result in serious damage to the unit. Syntron Material Handling will not assume responsibility for feeder performance as a result of any unauthorized alterations to the equipment.

THEORY OF OPERATION

In operation, power is supplied to the feeder magnet by means of a separate control. This control, in its simplest form, consists of a rectifier, switchgear, fuse block and fuses, and a control rheostat.

The rectifier is used to convert alternating current into a pulsating half-wave current. It does this by blocking one half of the A-C cycle while permitting the other half cycle to flow to the feeder magnet.

Each power cycle is followed by a half cycle of blocked current flow. During this half cycle, power is not available to the magnet and the magnet becomes de-energized. The magnetic pull between the magnet and armature is released and the leaf spring is permitted to spring back to (and slight through) its normal position. This pulls the trough, bracket and armature up and forward. See Figure 2.

The unit is adjusted to limit the travel of the armature so it does not "strike" against the face of the magnet. The space between the

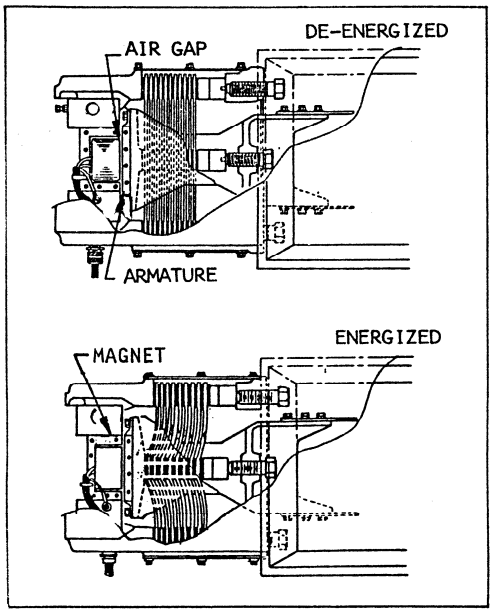

FIGURE 2 - FEEDER DRIVE UNIT

armature and magnet is called the “air gap” and its setting is critical to good feeder operation. Refer to the Air Gap on page 10.

MATERIAL FLOW

Figure 3 illustrates the action of a single particle of the material moving along the trough surface. During a vibrating stroke, the trough surface travels between its lowest point (A) to its highest limit (C). The trough travels at its greatest velocity between (A) and (B). Although still traveling up and forward, the trough decelerates between (B) and (C). On the upward stroke, the particle of material is in contact with the trough from (A) to (B). At point (B) the velocity of the particle becomes greater than the trough and the particle leaves the trough surface on a free flight trajectory from (B) to (D). The particle lands back on the trough surface at a position further forward (D). This completes one cycle. Each cycle imparts a forward and upward flight of the material and it lands further along the trough toward the discharge.

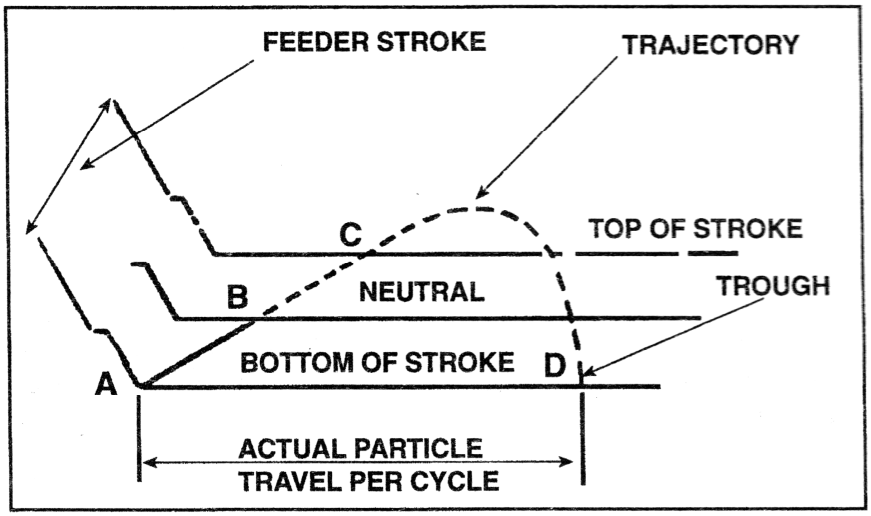

FIGURE 3 - MATERIAL FLOW ON TROUGH

With equipment operating from a 60-cycle power supply, the cycle of material flow is repeated 3600 time per minute.

The rate of material flow is controlled by varying the stroke of the trough. The number of strokes will remain constant but the stroke length can be adjusted by turning the rheostat knob on the controller to increase or decrease feed rate.

LONG TERM STORAGE

When received, the equipment should be carefully uncrated. If the feeder assembly is shipped mounted on skids, the skids should remain attached to the feeder until installation.

Give the equipment a thorough visual inspection to reveal any damage that may occurred during shipment. If damage is found, contact Syntron Material Handling and the shipping carrier at once.

If the feeder must be stored for an extended period, it is advisable to store indoors. If the feeder is stored outdoors, move the controller to an inside storage area. Place feeder on sufficient cribbing to protect from water.

⚠ CAUTION: Do not support the weight of the unit by the trough assembly. This will distort and damage the springs.

Apply oil or rust preventive to hardware and completely cover unit with a waterproof covering.

When storing the controller, plug all openings in the control box to prevent dirt, rodents and insects from entering. Syntron Material Handling advises placing a corrosion preventive inside control box. Cover the controller and place it in an area protected from extreme heat. Do not drop controller. The force of the impact may damage the components.

INSTALLATION OF FEEDER

⚠ CAUTION: Do not lift the unit by the trough.

When received, the equipment should be carefully unpacked. If the feeder assembly is shipped mounted on skids, the skids should remain attached to the feeder until installation.

Remove all other packing bands, paper, etc. Check the controller components for protective shipping blocks, tape etc. Give the equipment a thorough visual inspection to reveal any damage that may have occurred during shipment. If damage is found, contact Syntron Material Handling and the shipping carrier at once.

SUSPENSION-MOUNTED UNITS:

Suspension-mounted units are furnished with hanger assemblies to which suspension cables are attached (cables and fittings by customer). Syntron Material Handling recommends using flexible steel cables; mounting rods are not recommended. Table 1 indicates sizes of suspension cables required.

When installing the feeder, provide one inch minimum clearance around feeder. It must be free to vibrate.

The suspension cables must be as near vertical as possible. The feeder must be kept level transversely, but may slope down lengthwise toward the discharge end by as much as 15° (a 6° downslope is standard).

BASE-MOUNTED UNITS:

Base-Mounted units, furnished by Syntron Material Handling consist of coil spring and base frame. This unit must be firmly secured to supporting structure using the hardware specified by Syntron Material Handling (hardware supplied by customer). The supporting structure must be level and capable of supporting the entire weight of the unit under loaded, operating conditions. The supporting structure must be sufficiently rigid so that the vibrating action of the feeder is not transmitted to the support structure.

On base-mounted installation, the mounting column must be vertical.

Safety cables should be the same size as cables as used for rear suspension.

CAUTION: The feeder must never come in contact with any rigid object or adjacent surface that could hamper its vibrating action. Any connections (such as dust seals) between the trough and adjacent objects must be flexible, preferably cloth or rubber.

Feeder	STANDARD CABLE - MILD STEEL 6 Strands With Hemp Center 19 Wires Per Strand			
	Rear Suspension Cable Diameter	Maximum Safe Working Load In Tons	Front Suspension Cable Diameter	Maximum Safe Working Load In Tons
F-152	3/16"	0.20	1/8"	0.10
F-212	1/4"	0.45	1/8"	0.10

Safety Cables should be the same size cables as used for rear suspension.

TABLE 1 - RECOMMENDED CABLE SIZES FOR SUSPENSION-MOUNTED FEEDERS

SAFETY CABLE:

WARNING: Suspension mounted units must be equipped with safety cables.

Safety cables will prevent the feeder from falling into the work area below in the event a suspension hanger should break. The size of the safety cable should be equal to the size of the rear suspension cable. Refer to Table 1, page 4.

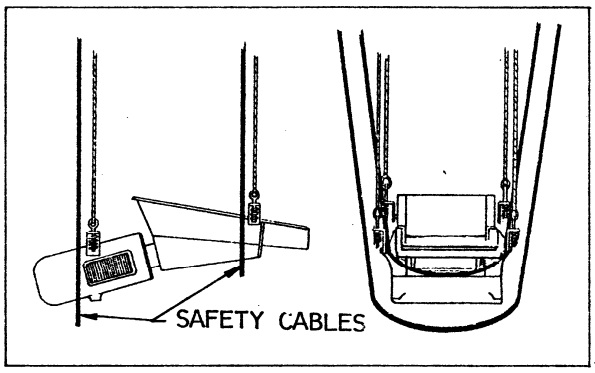

FIGURE 4 - SAFETY CABLES

The safety cable should be hung from a substantial support and must never touch any part of the feeder. Usually a 1” clearance between the cables and the feeder, when under load conditions is sufficient. The cables should be positioned as in figure 4.

It is important to remember that safety cables are installed as a safety precaution. Do not use the safety cables to support the feeder to support the feeder during normal operation. Clearance must always be maintained between the cables and the feeder unit.

HOPPER DESIGN

Refer to Figure 5.

The “Recommended” hopper with a T/H ratio of .5 shows a uniform flow pattern to the feeder trough. Material at the front and rear of the hopper moves at nearly the same velocity, and the depth of material “d” is nearly equal to the hopper gate height. The “Recommended” hopper design allows the most economical feeder to be used.

The “Acceptable” hopper design may require a slightly larger feeder than required for the “Recommended” design. This is due to the non-uniform flow pattern of material at the rear of the hopper. Material flow velocity is reduced, material depth “d” is reduced… and a reduction in feeder capacity is realized. A T/H ratio of .5 to 1.0 is generally acceptable. However, when the T/H ratio exceeds this range, the material flow patterns distort drastically and will significantly reduce feed rates.

1. Rear wall angle ”A” should be steep enough to permit material flow (60° or more).
2. Front wall angle “B” should be just enough to permit material flow (5° less than “A”).

“H” should be between 1.2 to 1.5 times “d”, where “d” is determined by:

$$\text{“d”} = \frac{\text{Capacity} \times 4800}{\text{W} \times \text{Flow Rate} \times \text{Density}}$$

$$\text{Capacity} = \frac{\text{W} \times \text{Flow Rate} \times \text{Density} \times \text{“d”}}{4800}$$

Capacity	=	Tons / Hr.
W	=	Feeder width in inches
Flow Rate	=	Ft /Min

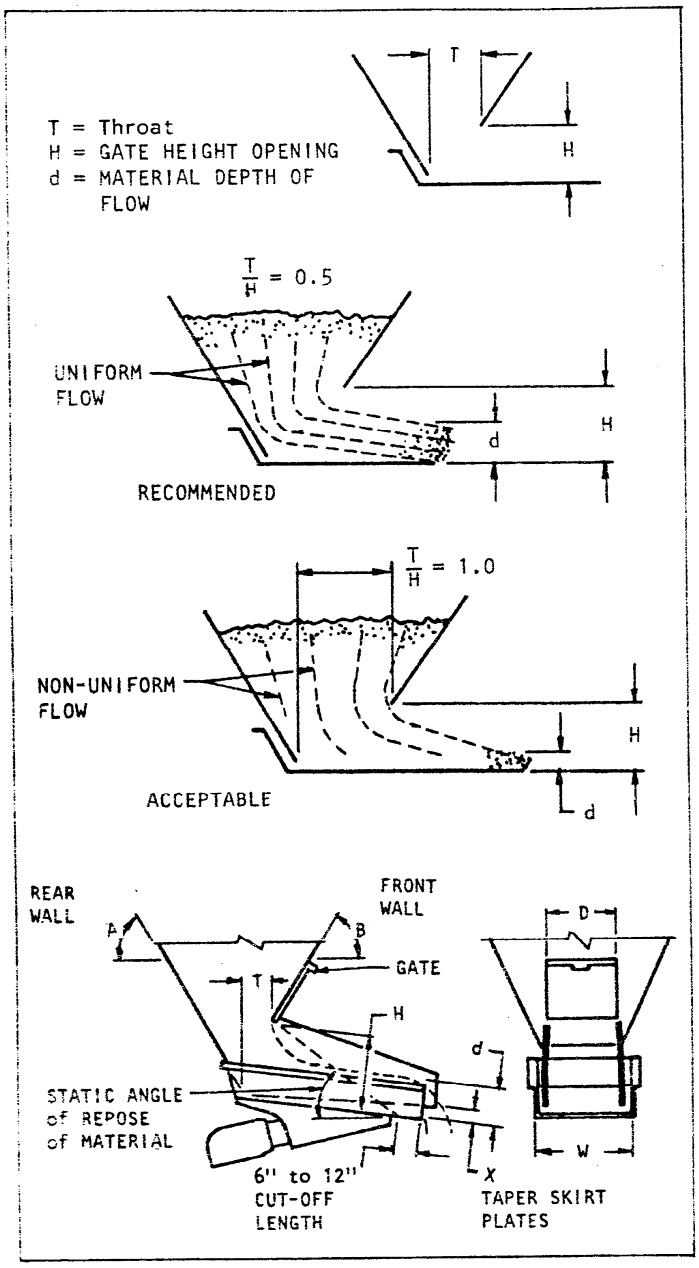

FIGURE 5 - HOPPER DESIGN

Density	=	Lbs / Ft 3
D	=	Material depth of flow in inches

3. Gate opening “H” must be a minimum of 2 times the largest particle of material and should increase proportionally for the desired capacity. The most economical feeder is selected when the throat dimension “T” is equal to or slightly larger than H/2. If “T” is greater than “H” the flow pattern of the material is disturbed resulting in non-uniform flow.

4. The width of opening “D” for random size material should be 2 1/2 times the largest particle; for near size particles, “D” is 5 times largest particle.

NOTE: The hopper opening must be adequate to provide the required capacity by gravity flow. The outlet must be large enough to prevent material from arching in the hopper due to particle size or cohesiveness of the material. The diagonal of the opening must be large enough to prevent a “rat-holing condition from occurring above the opening.

INSTALLATION CHECKS

1. Suspension cables or base-mounted spring seats should be properly adjusted so the isolator springs are equally loaded on each side of the feeder.
2. Suspension mounting hardware must be kept tight.
3. All coil mounting springs must be properly seated.
4. Flexible steel suspension cables are recommended.
5. Suspension cables must not whip.
6. The feeder must be clear of any adjacent structure including hoppers, skirt boards, etc. The vibratory action of the feeder must not be hampered in any way.
7. The width between hopper skirt boards must be greater at the discharge of the trough than at the hopper opening.
8. Skirt boards must be closest to trough bottom at the hopper opening, rising toward the discharge end.
9. Any connections to the feeder (dust seals, electrical cables, air lines, etc.) must be flexible.
10. Do not alter or make any additions to the feeder.
11. The voltage and frequency of the power supply must be the same as that designated on the nameplate.

CONTROLLER INSTALLATION

WARNING: The Electrical Power Supply Connection to the Syntron Material Handling supplied controller must be made through a customer supplied safety disconnect switch which must be mounted next to the controller.

CAUTION: For multiple feeder installations each controller is factory adjusted for a given feeder. It is very important that the proper controller is wired to its matching feeder. Failure to match controller and feeder can result in poor performance. Consult Syntron Material Handling if controllers and feeders are mismatched at installation. Syntron Material Handling can readjust controllers on site.

The controllers are marked with a number on the inside panel and the feeder is marked with a corresponding number adjacent to the nameplate.

In the event that controller subassembly is removed to a master control, insure control and feeder identify is retained.

When installing the controller, refer to the wiring diagram shipped with the controller.

CAUTION: The conductor between the feeder and controller must be of a size sufficient to carry the current and voltage as stamped on the equipment name plate. The voltage drop through a conductor of insufficient size for the required distance could result in a lack of feeder stroke during operation. See wiring diagram included with controller for size of conductor.

OPERATING PROCEDURE

WARNING: Before operating feeder make sure controller is closed and secured.

With the feeder and controller properly installed in their operating locations and all wiring completed, the equipment is ready for operation.

Before starting the equipment, rotate the control knob on the controller to a low counterclockwise position. Energize the line switchgear and the feeder will begin operating at a low stroke.. While the feeder is running at this reduced rate, check all external fasteners on the feeder assembly for tightness. Check the method of feeder support making sure it is substantial and the feeder is not touching any rigid objects or adjacent structure.

CAUTION: When operating normally, the feeder should perform with a smooth even stroke. If a loud “striking” noise occurs, immediately turn off the unit.

With the feeder operating satisfactorily, load the trough and adjust the control knob to the desired output. Turning the knob clockwise will increase the feed rate. Turning the knob counterclockwise will decrease the feed rate. The material will flow along the trough surface in a smooth, controlled manner toward the discharge end of the trough.

WARNING: While the equipment is in operation, personnel must keep clear of the discharge end of the unit.

MAINTENANCE

WARNING: Before performing any maintenance work, the electrical power supply must be disconnected at the safety disconnect switch.

Very little maintenance is required on the feeder and controller. However the following points should be given careful consideration.

1. Some materials tend to adhere and build-up on the trough surfaces. These deposits increase dead weight to the feeder. If permitted to accumulate, will alter the tuning of the feeder. Look for material build-up particularly around and under hopper openings. Wet or sticky material build-up can be prevented by using heated trough liner plates. Material build-up on the trough should be removed as a daily practice.

2. The feeder magnet and controller should be kept reasonably clean. A dry compressed air supply is recommended for general cleaning of these units. The use of water may result in shortage of electrical components.
3. With the unit de-energized, periodically check the core assembly fasteners for tightness.
4. With the unit de-energized, periodically check the air gap to make sure it is clean.

NOTE: Never oil the spring assembly. This destroys the clamping effect of the spring pads against one another.

NOTE: Any signs of excessive heat or burned components is an indication of trouble. At first notice of an overheating condition, investigate and correct the cause. Thus eliminating a major component failure. Feeder coils, under normal operating conditions, run warm but never too hot to touch.

TROUBLE SHOOTING

PROBLEM	CAUSE	CORRECTION
Feeder operates too slow (below capacity)	Low line voltage	Increase size of cable from power source. Check rating at power supply. *If consistently low (at 5 % or more) change the coil.
	Feeder in contact with rigid object or structure	Provide 1” minimum clearance
	Insufficient feeder downslope	Increase feeder downslope (do not exceed 15°).
	Hopper opening too small	Raise hopper gate or alter hopper design. Skirt boards may be required to handle additional material flow.
	Defective leaf springs	*Replace all leaf springs.
	Spring stack packed with rust or dirt	Remove and clean.
	Loose spring stack	Tighten spring clamping hardware (see Torque Specifications)
	Cracked or worn-out trough liners	*Replace trough or liner and adjust air gap.
Feeder operates too fast	High operating voltage	Check maximum voltage setting on controller. See instructions for controller.
Feeder hums, will not vibrate	Rectifier failure (within controller)	*Replace

Feeder fails to operate	Coil failure	Check rating of power supply. Check air gap. Short in wiring. Check for high current, resulting from defective or packed springs.
	No power to controller	Determine cause, repair.
	Short in wiring	Locate and repair.
	Defective control components	Refer to the controller service manual, for trouble shooting of controller.

TROUBLE SHOOTING (Continued)

Feeder exhibits loud striking noise. Striking is a result of the armature and core (stator) coming into contact.	Air gap between armature and core set too close.	Readjust air gap see page 10 for procedure
	Trough weight changed; additional weight added thicker liners, trough extensions, etc.	Remove additional weight, consult Syntron Material Handling for recommendations / service assistance
	Broken leaf springs.	Replace broken springs.
	Controller incorrectly adjusted.	Readjust controller voltage to feeder coil, consult Syntron Material Handling for correct setting, also refer to the Controller Service Manual.

* Replace parts only with those supplied or recommended by Syntron Material Handling

AIR GAP

The air gap is the spacing that exists between the armature and core assembly, see Figure 2, page 2. Proper adjustment of this space is extremely important for good feeder operation.

If the air gap is adjusted so the armature and core are too close, the faces of these items will make contact during feeder operation. This is called “striking”. A “striking” condition will cause severe mechanical damge (broken springs, cracked trough or base, cracked armature or core).

If the air gap is adjusted so the armature and core are too far apart, the current will be excessive. A high current condition will result in coil burn-out, failure of control components or a reduced material feed.

The air gap factory set at approximately .062” for best performance of Models F-152 and F-212 without exceeding current rating on the nameplate of the feeder. It is important that the maximum trough stroke of .045” to .050” is not exceeded when final adjustment is made to the air gap.

For resetting the air gap, use the following procedure.

1. Remove top cover on the feeder drive to expose core and armature.
2. Loosen bolts securing core to feeder drive and loosen locknuts and rotate set screws (jack screws) several turns counterclockwise.
3. Close air gap so that pole faces of the core and armature are in contact. Use jack screws to reset air gap to approximately .062’ and tighten core holddown bolts and locknuts on jack screws.
4. Operate feeder to check trough stroke. Stroke must not exceed .045” to .050”.

After the air gap is satisfactorily adjusted, tighten the core hold-down bolts to the proper torque and replace cover.

Checking the Feeder Current with a Tong Meter

When reading the current of the unit with a tong meter, the meter reading must always be multiplied by a value of 1.7. A tong meter does not reveal the same current as designated on the name plate due to the waveform characteristics of the feeder, when operating. Therefore, the 1.7 multiplier must be used. All readings must be taken at the controller.

STROKE GAUGE

Feeder stroke is the distance the trough travels in one complete cycle of vibration. This is measured from the forward upward limit of the vibrating stroke to the downward backward limit of the vibrating stroke. Refer to Figure 3, page 3.

Syntron Feeder Models F-152 and F-212 will operate at a maximum stroke of .045” to .050” at maximum control setting.

The stroke is read from a stroke gauge on the feeder wing plate.

Under vibration, a black “V” will appear on the gauge. The stroke of the unit can be read at the apex of this black “V”. The lines should appear solid black.

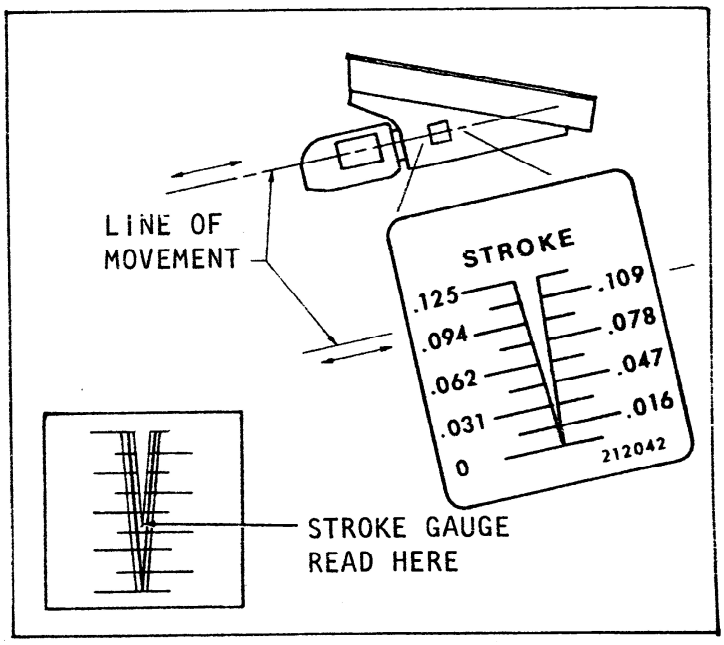

FIGURE 6 - APPLICATION OF STROKE GAUGE

Important

Syntron Material Handling reserves the right to alter at any time, without notice and without liability or other obligations on its part, materials, equipment specifications, and models. Syntron Material Handling also reserves the right to discontinue the manufacture of models, parts, and components thereof.

Your satisfaction is very important to us. Please direct any comments, questions, or concerns to our Marketing Communications Department.

Syntron Material Handling

Corporate Office
P.O. Box 1370
Tupelo, Mississippi 38802
Phone: 662.869.5711
Fax: 662.869.7449

Syntron®
Link-Belt®

Tupelo
2730 Hwy 145 South
Saltillo, Mississippi 38866
Phone: 662.869.5711
Fax: 662.869.7493
Toll Free: 800.356.4898
info@syntronmh.com

Changshu
#2 Road No. 1
Changshu Export Processing Zone
Changshu, Jiangsu, China 215513
Phone: +86 0512.52299002
Fax: +86 0512.52297228
info@syntronmh.com

Form No. SM0565_122214 Printed in U.S.A